ECO NO.	DATE	REV.	REVISION RECORD	AUTH.	DR.BY
7801	05/01/2024	-	PRODUCTION RELASE		EF
7822	10/23/2025	A	CHANGE INJ4-ECU_J2 P21 WIRE COLOR FROM WHT/BLK/BLU TO WHT/BLK/RED		EF
7837	11/19/2025	B	CHANGED 10A FUSE TO 15A FUSE.TC1 GROUND SPLICE WAS MISSING. CORRECTED WIRE GAUGE AT TC1 CONNECTOR		IGH

PAGE 1

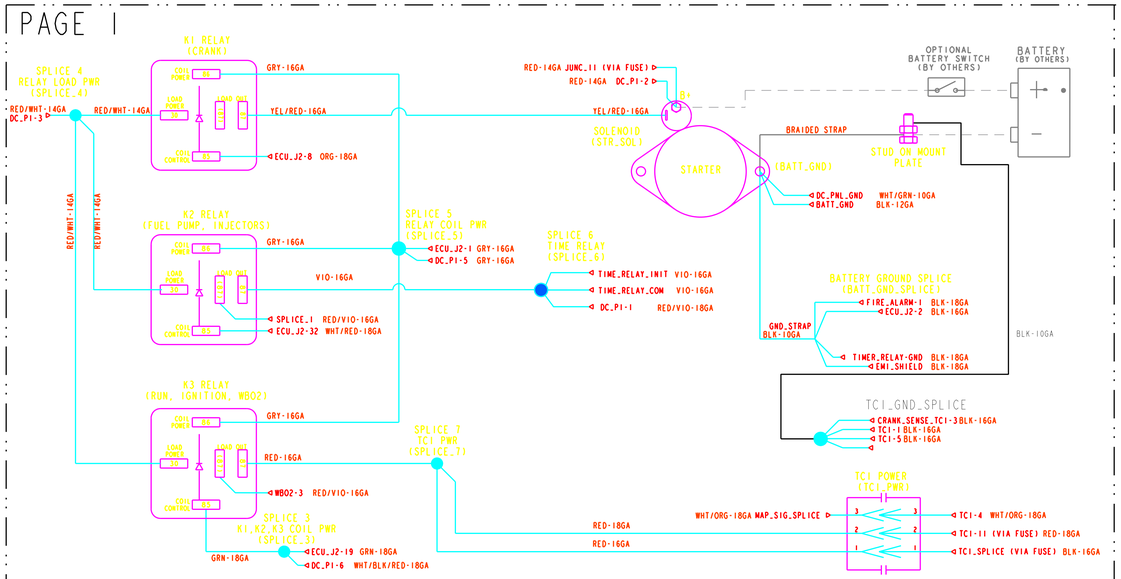

PAGE 2

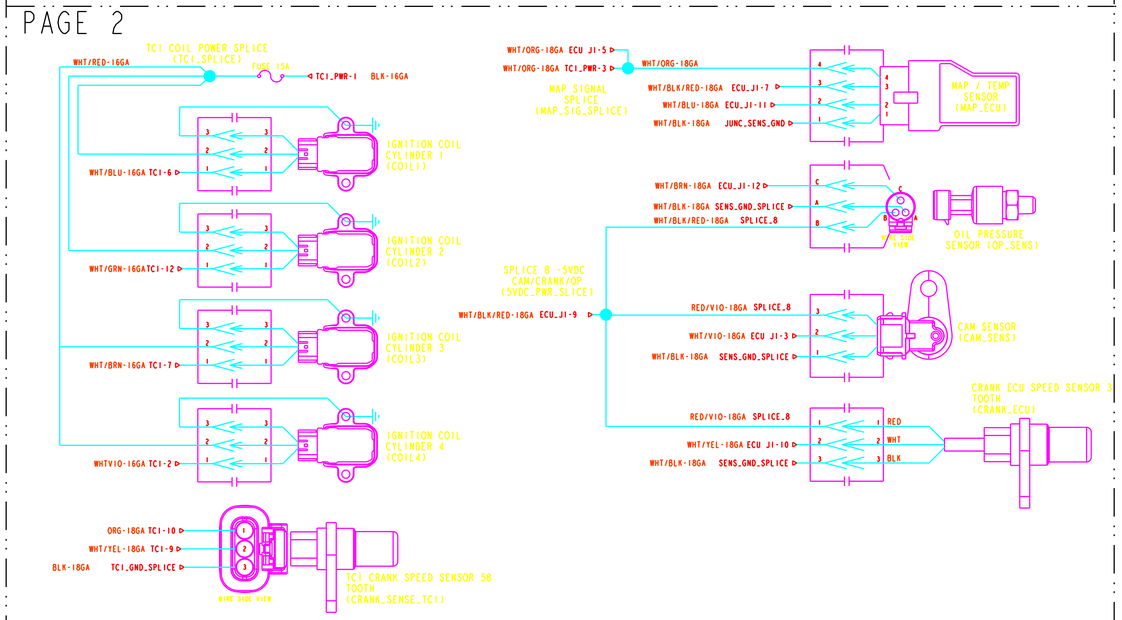

PAGE 3

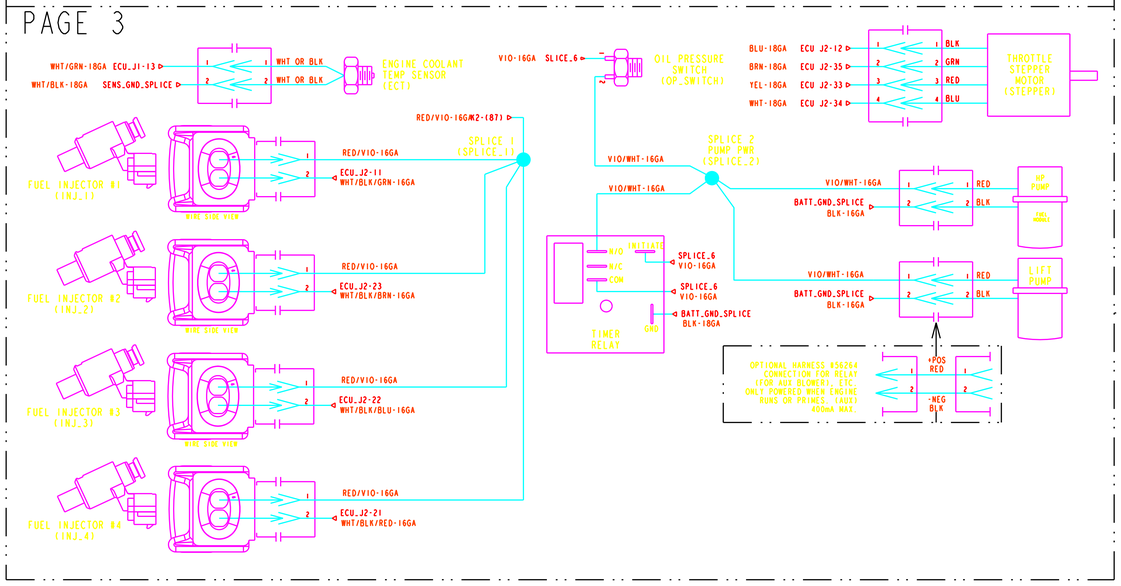

PAGE 4

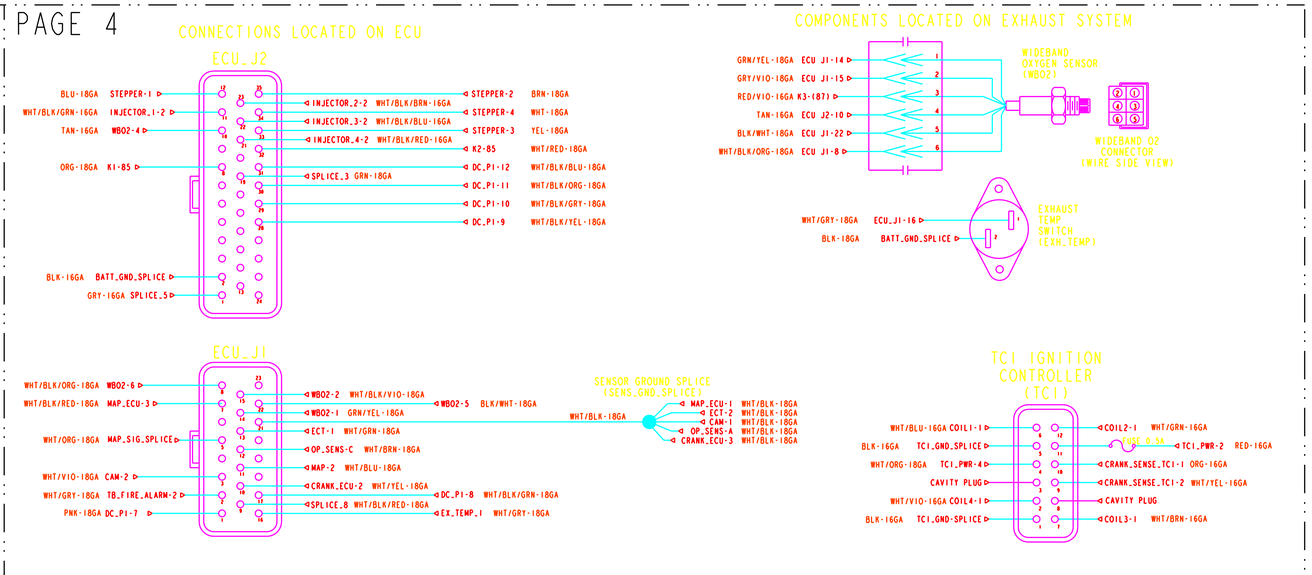

PAGE 5

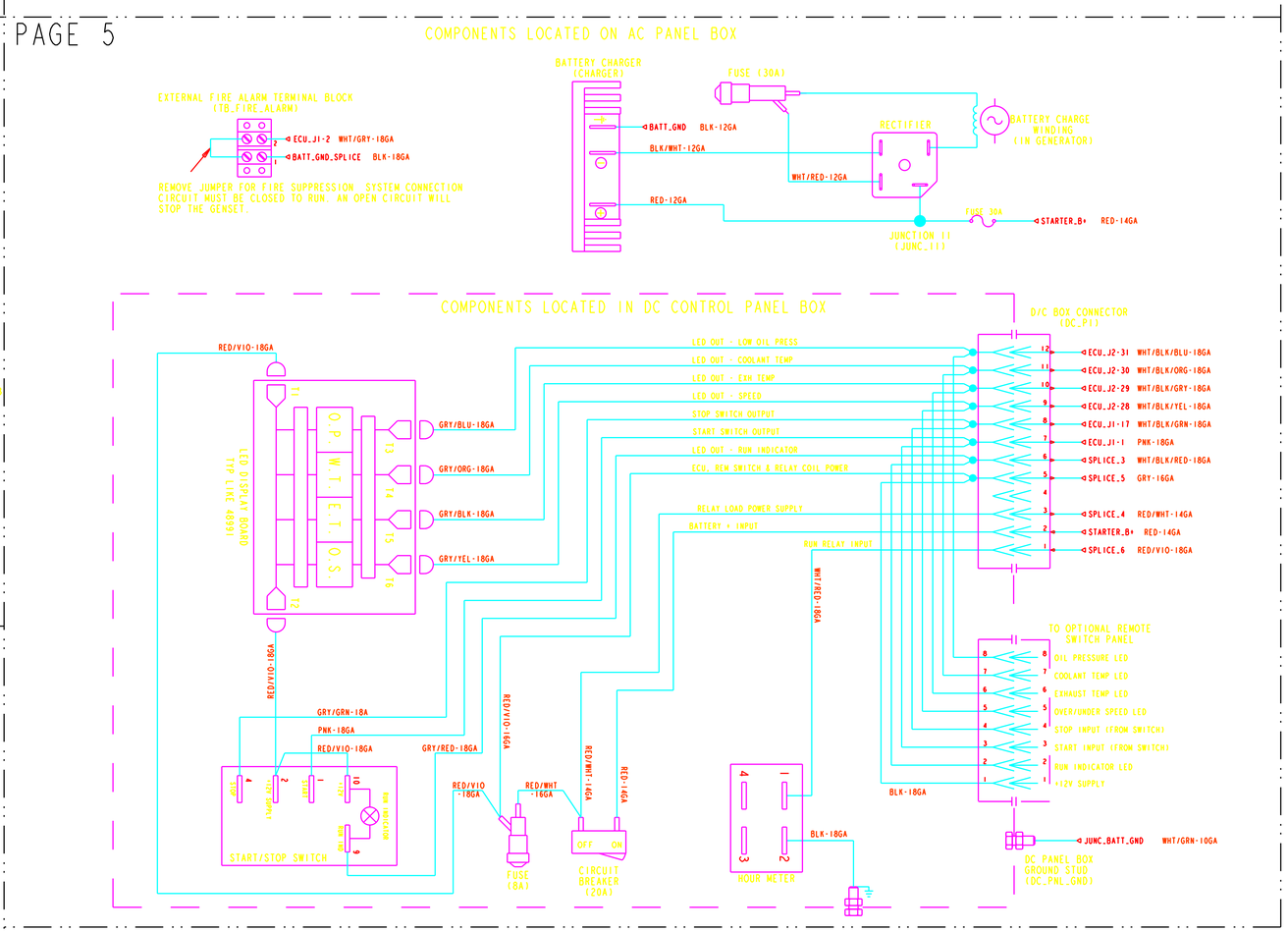

TOLERANCES
UNLESS OTHERWISE SPECIFIED
PRIMARY UNITS(INCHES)
SECONDARY UNITS(MILLIMETERS)
INCHES: X ± .010, XX ± .005, XXX ± .005, .XXXX ± .0005
MILLIMETERS: .X ± .25, .XX ± .13, .XXX ± .12, .XXXX ± .013
RUNOUT:0.005 (.12) TIR
SURFACE FINISH:63MSA (1.6)
ANGLES: ±2.1°
THIRD ANGLE PROJECTION

WESTERBEKE Engines & Generators
150 JOHN HANCOCK RD TAUNTON MA 02780 (508) 823-7673

TITLE: DGGENSET W IRE 9.5 MCGB

DRAWN BY:	DATE CREATED:	MATERIAL:
EF	02/15/2024	FINISH:
APPROVED BY: ----	DATE: --/--/----	
SCALE 0.048	SIZE E	DRAWING NUMBER 58254
SHT. 1 OF 1		REV B

THIS DRAWING IS PROPRIETARY TO WESTERBEKE CORP AND MAY NOT BE REPRODUCED OR DISCLOSED TO A THIRD PARTY WITHOUT EXPRESS WRITTEN PERMISSION